NICT Technology Development Center 2017+2018 Biennial Report

Kazuhiro Takefuji [1], Hideki Ujihara [1]

Abstract The National Institute of Information and Communications Technology (NICT) is developing and testing VLBI technologies and conducts observations with this new equipment. This report gives an overview of the Technology Development Center (TDC) at NICT and summarizes recent activities.

1 NICT as IVS-TDC and Staff Members

The National Institute of Information and Communications Technology (NICT) publishes the newsletter "IVS NICT-TDC News (former IVS CRL-TDC News)" at least once a year in order to inform about the development of VLBI related technology as an IVS technology development center. The newsletter is available at a following URL `http://www2.nict.go.jp/sts/stmg/ivstdc/news-index.html`. Table 1 lists the staff members at NICT who are contributing to the technology development center.

Table 1 Staff Members of NICT TDC as of January, 2017 (alphabetical).

HASEGAWA, Shingo	KAWAI, Eiji
MIYAUCHI, Yuka	SEKIDO, Mamoru
TAKEFUJI, Kazuhiro	TSUTSUMI, Masanori
UJIHARA, Hideki	

1. Kashima Space Technology Center, National Institute of Information and Communications Technology

NICT Technology Development Center

IVS 2017+2018 Biennial Report

2 General Information

We have been developing a broadband VLBI system called GALA-V, which has not only to meet the VGOS (VLBI2010 Global Observing System) requirements, but also upgrading cassegrain optics antenna such as our 34 m ratio telescope and compact telescopes for the project of Time and Frequency transfer.

3 The 2.4 m diameter Compact antenna Installed in Medicina for Time & Frequency transfer by VLBI

On March 2018, the 2.4 m diameter compact telescope installed in NMIJ in Tsukuba was moved to Kashima to perform the maintenance. Then, every instruments were packed and transferred to Medicina observatory in Bologna on May 2018. We visited Bologna to installed the compact antenna in summer 2018. After we spent in one week, the antenna was successfully installed and we got first fringe between Ishioka and Medicina during our visit (fig.1).

4 Broad band VLBI on Italy and Japanese baseline

We have conducted VLBI experiment for optical clock comparison on Italy-Japan intercontinental baseline. Reference signal generated by Yb optical lattice clock at INRIM in Torino is provided to Medicina by stabilized optical fiber link. Sr lattice clock has been op-

Fig. 1 Memorial picture when the 2.4m diameter compact telescope was successfully installed at Medicina observatory

erated at NICT headquarters. These two optical lattice clock signals were compared by a series of VLBI experiments via VLBI network observations with transportable 2.4m diameter broadband VLBI stations at Medicina radio astronomy observatory of INAF in Italy and NICT headquarters at Koganei Japan, and 34m radio telescope at Kashima. Hydrogen masers are used for reference signal of VLBI observations, and behavior of these masers as fly-wheel to keeping clocks are monitored with optical clocks at each end, which were operated intermittently. The VLBI-link of frequency transfer will be compared with GPS-link as alternative technique.

Since October 2018, we have conducted the standard geodetic VLBI experiment, where multiple radio sources in different part of the sky are observed alternatively. We chose about 20 compact quasars, whose flux densities are mostly over 1Jy, from the radio catalogues in single session. Originally developed broadband NINJA feeds, which is capable to observe from 3.2 to 14.4GHz frequency range, are mounted at two 2.4m diameter VLBI antennas and Kashima 34m antenna. Single linear receiver is equipped at these small VLBI stations and dual linear polarization at 34m VLBI station.

Initial observation was made at 5.5GHz, 8.0GHz, 10.0GHz, and 12.8GHz radio frequency with 1GHz bandwidth each. High speed RF-direct sampling technique, which digitizes the radio signal at 16GHz sampling, enables stable group delay measurement in broad frequency range. About 60TB of observation data at Medicina was transferred averagely 5 Gbps to Kashima in 2 days for each session via high speed research networks by using jive5ab. Next 4days, we perform the correlation processing for total 240 TB was made with GICO3 software correlator. As a post processing, two linear polarization datasets (V-V and H-V) are combined with compensating the delay and the phase difference(shown in left figure of Fig.4). Signal over the broad frequency range is synthesized by Wideband bandwidth synthesis with correcting the ionospheric delay. Right figure of Fig.4 is shown the measured ΔTEC effect during the session.

5 Holographic measurement of Kashima 34m RT with applying VLBI technology

Holographic measurement are performed by applying the correlation between a reference antenna and a target antenna. Normally the direction of the former antenna is toward a stationary orbit satellite and the latter antenna drives as a zigzag motion toward the satellite so that it covers with a beam pattern map of the target antenna. Two dimensional beam pattern in complex has a Fourier relationship of the illumination pattern and the displacement distribution of the target surface. Thus, wider angle observation makes finer result.

A repair work of the main mirror of Kashima 34 meter telescope in summer 2018 would anticipate the main mirror shift and degrade the sensitibity. Actually our stuff reported a few cm change during the repair work. We developed the holographic measurement with applying VLBI technology(see photo 3) and perform before and after the repair work. Data reduction of the holographic measurement performs as following the procedure,

1. Acquiring data by K5/VSSP32 at 16-Msps, 8-bits
2. Performing correlation the 8-bits data by GICO3 and output the data for each 10 ms.
3. By comparing the antenna log and the correlation outputs, correlation outputs represent in Az and El domain.
4. Performing two dimensional Fourier transform with roughly removing the phase offset and phase slope.
5. Performing the least squared method to remove the phase offset accurately.

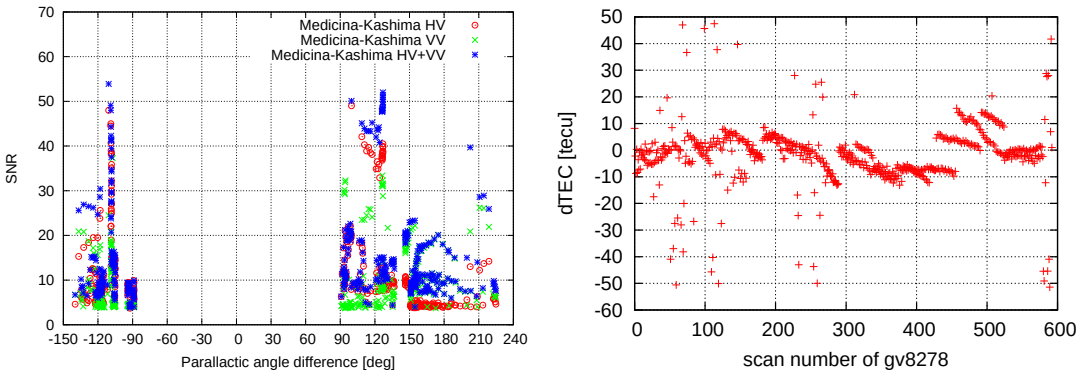

Fig. 2 Left: Red circles shows the Hpol-Vpol correlation result on Kashima and Medicina baseline and Green crosses are for the Vpol-Vpol result. After two polarization pairs were synthesized, SNR shown in blue asterisk was improved. Right: ionospheric effect by wide bandwidth synthesis is clearly appeared a large variation on Italy and Japan baseline in 30h session(right).

6. Calculating the displacement value at each bolt position in antenna surface.
7. Let go work!

Fig.4 shows the measurement system. Here, signals from two antennas transfer to the observation room and we record the data by K5/VSSP32 after single down-conversion are done. After the repair work was completed, we iteratively adjustment the main surface based on the Holographic measurements. The results are shown in fig.5 and fig.5. RMS just after the repair work completed was 1.5 mm and RMS after the adjustment the surface was 0.3 mm.

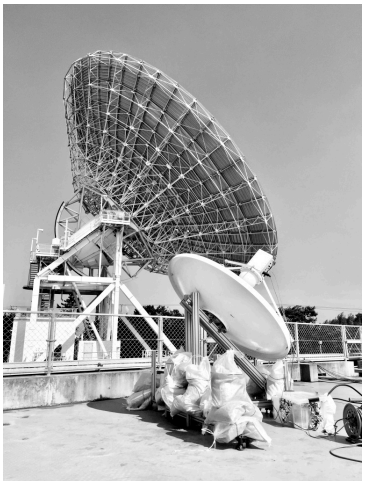

Fig. 3 Reference antenna and Kashima 34m RT during the Holographic measurement.

6 Wideband feed development

6.1 Kashima 34m antenna

The NINJA Feed for 34m antenna was replaced newly developed feed. Distinguishing feature of this feed is shorter length and less weight than previous one (Fig.7). Before replacing the old feed, Far-field patterns of the new one were measured by near field scanner in the radio shielded room at METLAB in Kyoto University. Also, the aperture efficiency after installation to 34m RT is 30-40 % and nearly flat to upper frequency with ripples over 3.2-14.4GHz. The ripples will be improved by reducing the return loss of the OMT and anti-reflection coating of the lenses in future development.

6.2 MARBLEs: the 2.4m diameter antenna

MARBLE1 was moved to Medicina radio observatory Italy for intensive experiment of VLBI T&F transfer with Japan. Both of MARBLE1 and MARBLE2 were refurbished with rigid and light weight CFRP pipes as a pillar to keep mirrors in $\pm$1mm accuracy, and NINJA feeds were replaced with new OMTs and lenses(Fig.8). RF over Fiber system of MARBLE1 was also replaced to improve stability before shipment for Bologna on May 2018.

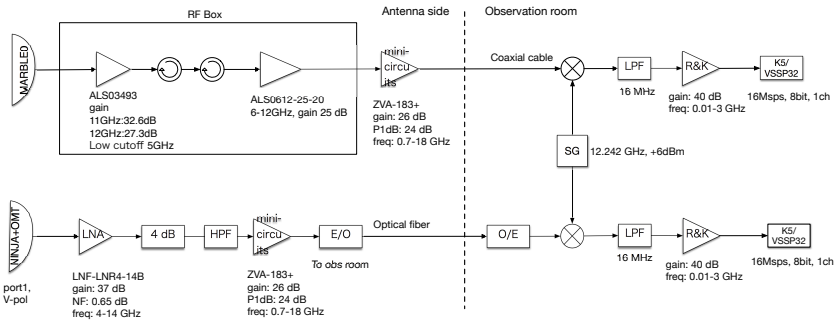

Fig. 4 System diagram of the holography measurement.

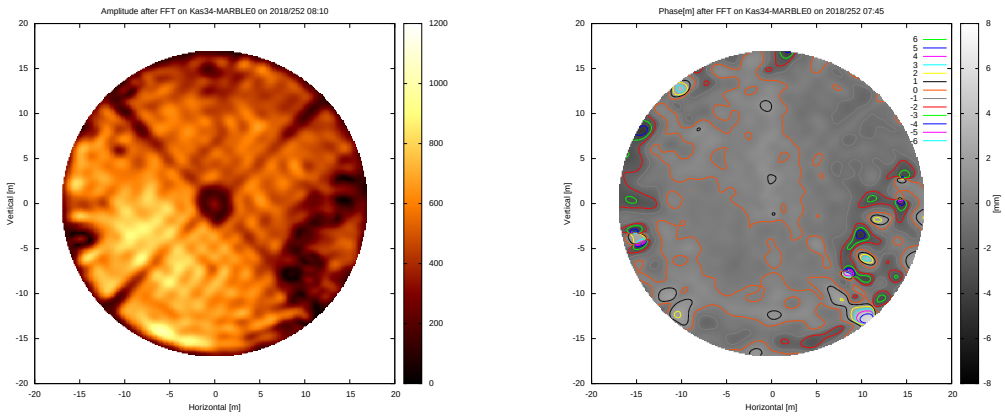

Fig. 5 Left: Obtained illumination pattern. Cross on the figure was caused by four pillars to support secondary mirror. Right: displacement distribution (right) of the Kashima 34 meter telescope just after the repair work was completed. Some messy regions due to the repair work and the 30 years aging can be found from both figures.

6.3 Ortho Mode Transducer; OMT

Extremely strong RFI under 3GHz had made an intermodulated noise and pushed up the noise temperature of our Gala-V system. Dedicated OMTs with sharpened skirt under 3.2GHz to cut such RFI were developed to replace previous OMTs of NINJA feeds in 34m antenna and MARBLEs.

7 Future Development Plans

Development of new water vapor measurement system with 20-60GHz wide-band feed and preliminary research for 1.5-15.5GHz wide-band second focus feed for BRAND project were started.

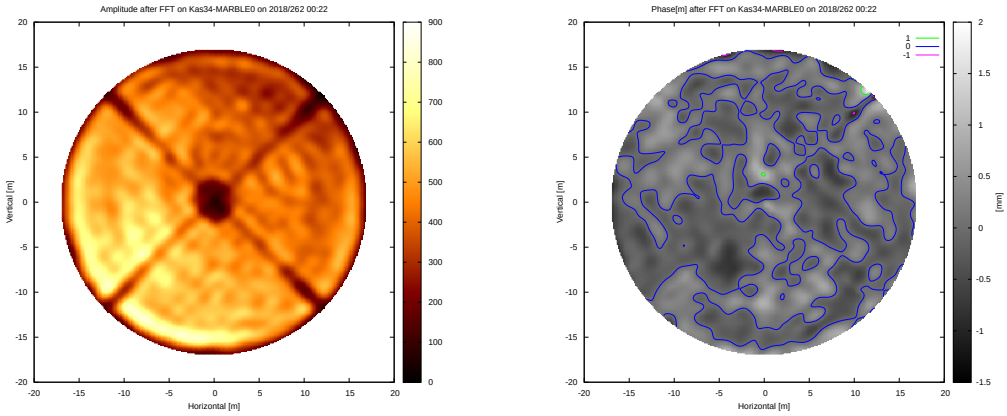

Fig. 6 Same figure as figure.5 but that of after the careful surface adjustment was completed.

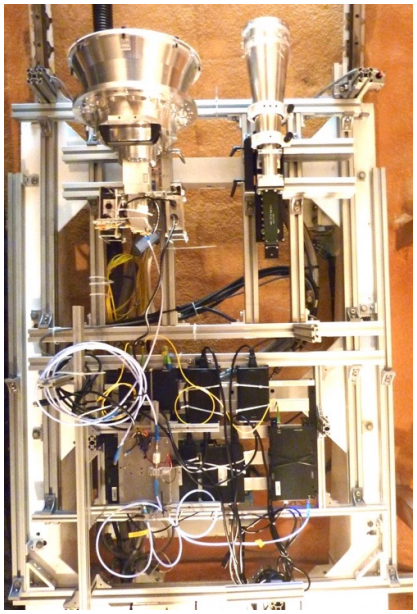

Fig. 7 New compact NINJA Feed in Kashima 34m antenna, on the left stage of the receiver carriage in the feed cone. IGUANA-H is placed on the right.

Fig. 8 Refurbished MARBLE 1 at Kashima before shipment.